Nivz Valves & Automation

Swing Check Valve, NRV

DRG. No.: NSC15/30

Rev. No. 00

Appd._____ Chkd._____ Drwn._____

FEATURES

* Bolted Cover Design
* Renewable/Seal Welded/Integral Seat Available
* Tilting Disc Design Available [Optional]
* Disc & Seat Stellited Hard Face [Optional]

Pressure Rating : 150 #/300#
End Connection : Flanged End
Flange Drilling : ANSI B 16.5, Class 150/300
Face To Face : ANSI B 16.10

Nomenclature:-

NO.	PART NAME	MATERIAL
1	Body	IS 210 GR. FG 200/220/260 ASTM A 216 GR. WCB ASTM A 351 GR. CF 8/8M/3/3M
2	Cover	
3	Seat Ring	CA 15/AISI 410/304/316/304L/316L
4	Disc	CA 15/WCB+13% Cr. Face/ ASTM A 351 GR. CF 8/8M/3/3M
5	Hinge Pin	AISI 410/304/316
6	Hinge Lever	WCB/CF 8/8M/3/3M
7	Disc Lock Nut	C.S./2H/S.S. 304/316/304L/316L
8	Gasket	CAF/PTFE/SP. WOUND/GRAFOIL
9	Bolt & Nut	C.S./B7/2H/S.S. 304/316/304L/316L

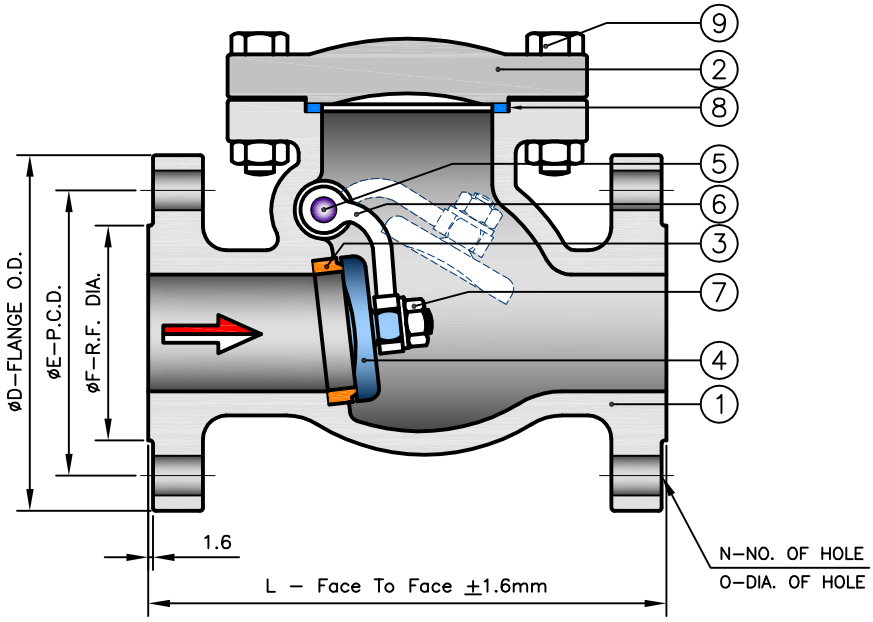

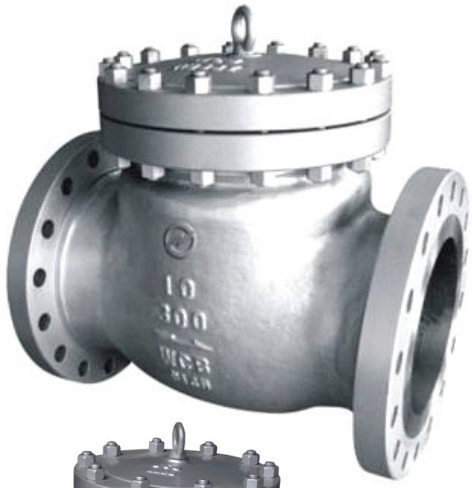

Design Standard : BS 1868/API 6D

Dimensions [150 Class]

SIZE		25	40	50	65	80	100	125	150	200	250	300
Flange Details	L	127	165	203	216	241	292	330	356	495	623	699
	ØD	108	127	152.4	177.8	190.5	228.6	254	279	343	406	483
	ØE	79.3	98.4	120.6	139.7	152.4	190.5	215.9	241.3	298.4	362.0	431.8
	ØF	50.8	73	92.1	104.7	127.0	157.2	185.6	215.9	269.9	323.8	381
	N	4	4	4	4	4	8	8	8	8	12	12
	ØO	15.8	15.8	19	19	19	19	22.2	22.2	22.2	25.4	25.4
H		140	150	155	190	200	225	245	260	305	390	410

Dimensions [300 Class]

SIZE		50	65	80	100	125	150	200	250	300
Flange Details	L	267	292	317	356	400	445	533	623	711
	ØD	165.1	190.5	209.5	254	279.4	317.5	381	444.5	520.7
	ØE	127	149.3	168.1	200.1	235	269.7	330.2	387.3	450.7
	ØF	92.1	104.7	127.0	157.2	185.6	215.9	269.9	323.8	381
	N	8	8	8	8	8	12	12	16	16
	ØO	19	22.2	22.2	22.2	22.2	22.2	25.4	28.4	31.7
H		430	475	535	605	715	845	1075	1255	1430

All Dimensions Are In mm

Testing Standard : BS 6755-I

Test Pressure in PSIG/BAR/KG./CM²									
Test	Hydrostatic								
Pr. Rating	150#						300#		
MOC	C.I.			C.S/S.S.			C.S/S.S.		
Body	215	14.7	15	425	29.3	30	1125	77.5	79
Seat	142	9.8	10	300	20.7	21	825	56.8	58

nivz™
VALVES & AUTOMATION
www.nivzvalves.com

For Record ☐ For Reference ☑ For Approval ☐

Client _____

Enq./Order No. _____

Job / Project _____

Manufactured By : **Nivz Valves & Automation**, Ahmedabad, Gujarat, INDIA.

Do Not Copy Drawing
© COPYRIGHT

Due to continuous development programme, the design and data given in this leaflet are subject to change without prior notice